PW-YC010

# Beam Clamp 1 Ton

## Características Esenciales

- 3 Años de Garantía, Servicio y Atención al Cliente en Chile

## Especificaciones Técnicas

| | | | |
|---|---|---|---|
| **Capacidad de Carga** | 1 Ton / 2200 lbs. \| Test Load: 1.5 Rated Load | **Garantía** | 3 Year |
| **Rango de ancho de la Viga** | 10 in | | |

| Working Load | I-Beam Width | A Max. | B | | C | D | E | F | | G | H |
|---|---|---|---|---|---|---|---|---|---|---|---|
| | | | Min. | Max. | | | | Min. | Max. | | |
| 2200 | 3 - 8.5 | 10.25 | 7 | 14 | 2.5 | 0.19 | 8.5 | 4 | 6.1 | 1 | 0.86 |
| 4400 | 3 - 8.5 | 10.25 | 7 | 14 | 3 | 0.23 | 8.5 | 4 | 6.1 | 1 | 0.86 |
| 6600 | 3 - 12.5 | 14 | 9.25 | 19.25 | 4 | 0.31 | 10.2 | 5.5 | 8.85 | 1.8 | 0.94 |
| 11000 | 3 - 12.5 | 14 | 9.25 | 19.25 | 4.3 | 0.4 | 10.2 | 5.5 | 8.85 | 1.8 | 1.1 |

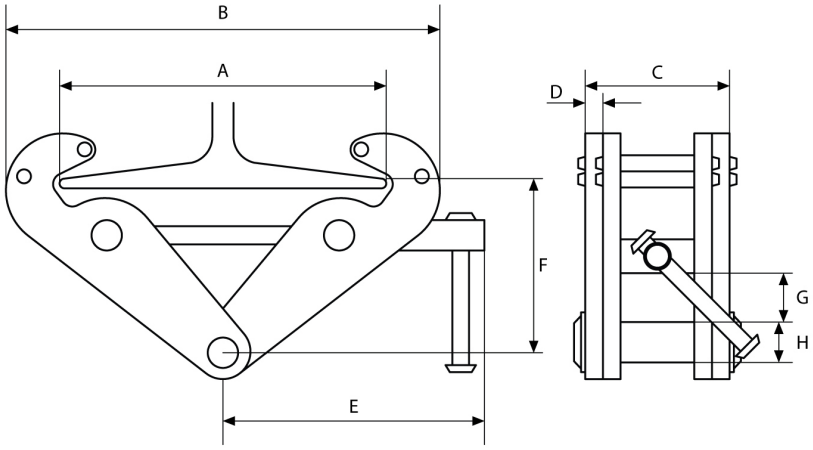


## Peso & Dimensiones

| | |
|---|---|
| **Peso Total** | 18 lbs / 9 Kg |

## Detalles del Empaque

| | |
|---|---|
| **Paquete 1 Peso Neto** | 15 lbs / 7 Kg |
| **Paquete 1 Ancho** | 7 in / 17.78 cm |
| **Paquete 1 Peso Bruto** | 18 lbs / 8 Kg |
| **Paquete 1 Altura** | 5 in / 12.7 cm |
| **Paquete 1 Profundidad** | 18 in / 45.72 cm |

Referential Images / Imágenes Referenciales
Specifications may change without notice / las especificaciones pueden cambiar sin previo aviso